CIEL LIGHT CO., LTD.

PRODUCT SPECIFICATION

Customer:_____

Customer's Model No.:_____

Customer's Drawing No.:_____

Model No.: CL-5019SGW1C-003-CA

Drawing No.:_____

Features

Low Power Consumption

High Efficiency

Round Type

T1 (5mm) Diameter

With Flange

Solder Leads Without Stand-off

Compliant With RoHS

ATTENTION

OBSERVE PRECAUTIONS
FOR HANDLING
ELECTROSTATIC
SENSITIVE DEVICES

Descriptions

Chip Material: AlGaAs/GaAs、GaP/GaP

Emitting Color: Red、Green

Lens Color: White Diffused

Outline Drawing

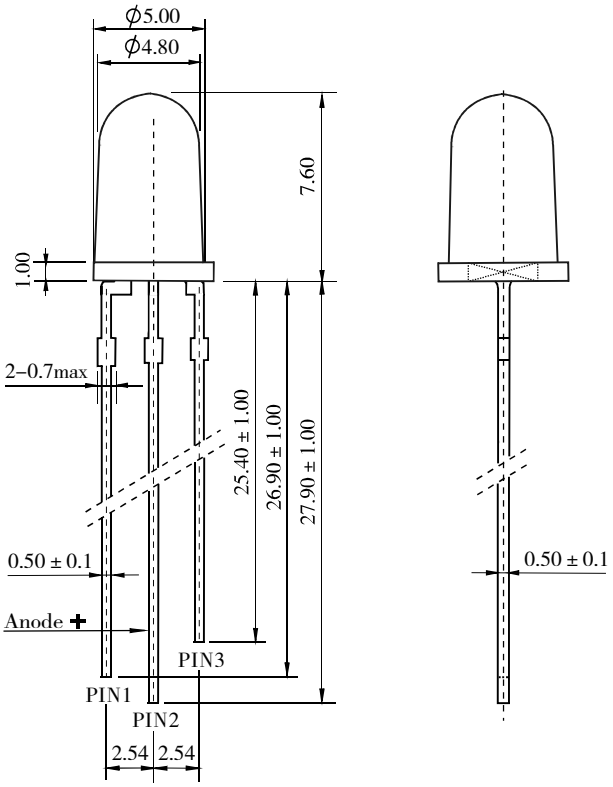

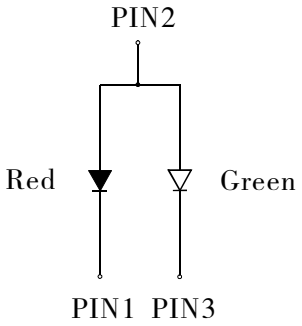

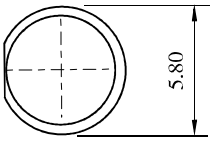

Tolerance is ± 0.25mm

Unless Otherwise Specified.

Electrical Optical Characteristics (Ta=25℃)

Parameter	Symbol	Red			Unit	Test Condition
		Min	Typ	Max		
Forward Voltage	V_F	---	1.80	2.20	V	IF=20mA
Luminous Intensity	I_V	26.6	52.0	72.8	mcd	IF=20mA
Peak Wavelength	λ_P	---	660	---	nm	IF=20mA
Dominant Wavelength	λ_d	---	644	---	nm	IF=20mA
Spectral Line half-width	$\Delta\lambda$	---	20	---	nm	IF=20mA
Reverse Leakage Current	I_R	---	---	50	μA	VR=5V
Viewing Angle	$2\theta_{1/2}$	---	60	---	Deg	IF=20mA

Absolute Maximum Parameters (Ta=25℃)

Parameter	Symbol	Condition	Rating	Unit
Power Dissipation	P_D	---	80	mW
Reverse Voltage	V_R	---	5	V
Forward Average Current	I_F	---	30	mA
Temperature cofficient	I/C	---	0.33	mA/ ℃
Pulse Current	IFP	Duty=1/10,1kHz	100	mA
Operating Temperature Range	Topr	---	-25 ~ +85	℃
Storage Temperature Range	Tstg	---	-30 ~ +100	℃
Soldering Condition	Tsd	---	260℃/5sec	℃

NOTE:

Luminous Intensity Measurement allowance is ± 10%.

$2\theta_{1/2}$ is the off-axis angle at which the luminous intensity is half the axial luminous intensity.

The dominant wavelength is derivd from the CIE chromaticity diagram and represents the single wavelength which defines the color of the device.

Typical Electro-Optical Characteristic Curves (Ta=25℃)

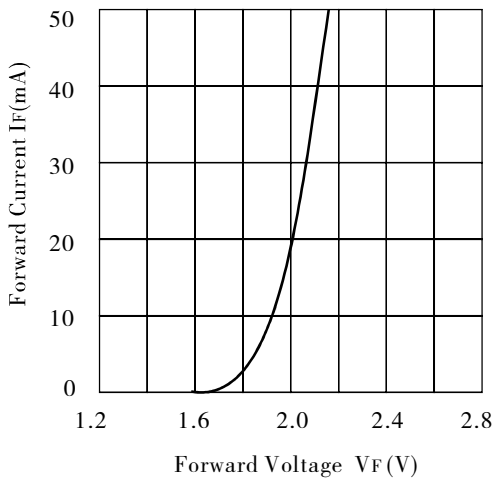

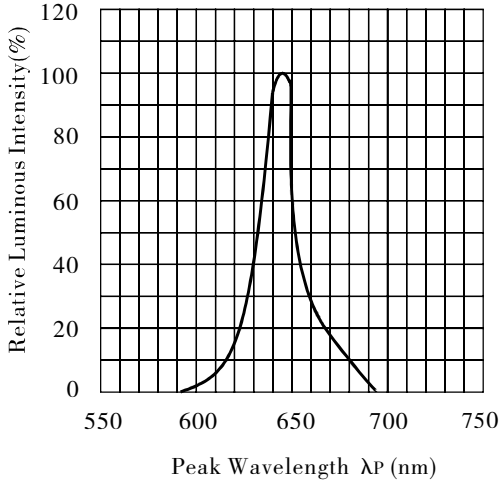

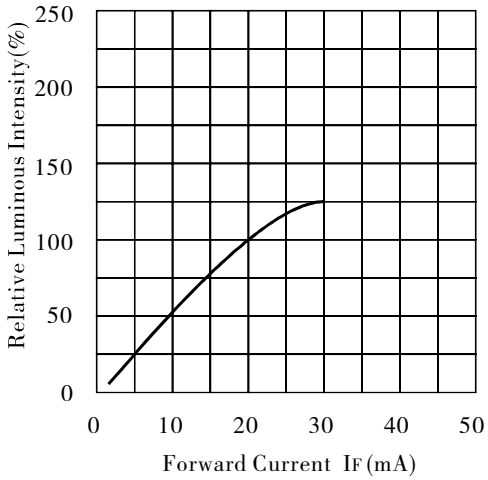

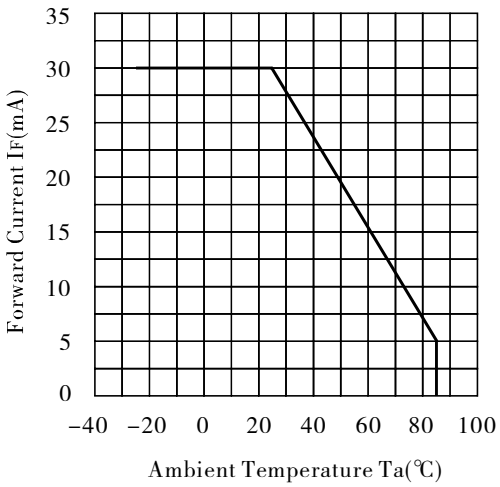

Directive Characteristics

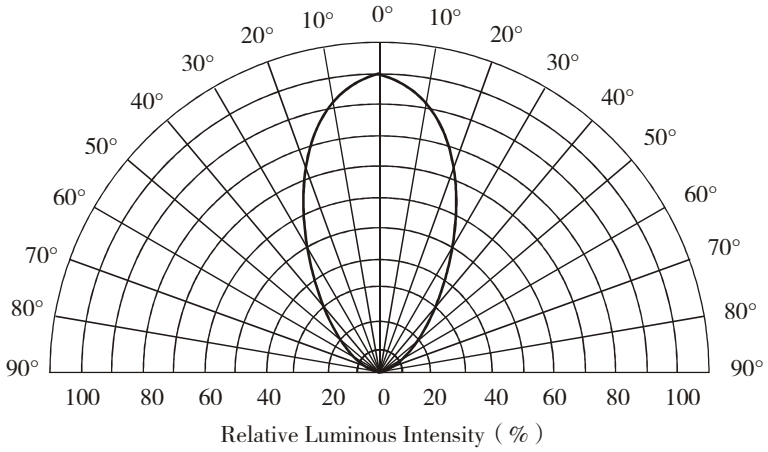

Electrical Optical Characteristics (Ta=25℃)

Parameter	Symbol	Green			Unit	Test Condition
		Min	Typ	Max		
Forward Voltage	V_F	---	2.20	2.60	V	IF=20mA
Luminous Intensity	I_V	26.6	52.0	72.8	mcd	IF=20mA
Peak Wavelength	λ_P	---	568	---	nm	IF=20mA
Dominant Wavelength	λ_d	---	572	---	nm	IF=20mA
Spectral Line half-width	$\Delta\lambda$	---	30	---	nm	IF=20mA
Reverse Leakage Current	I_R	---	---	50	μA	VR=5V
Viewing Angle	$2\theta_{1/2}$	---	60	---	Deg	IF=20mA

Absolute Maximum Parameters (Ta=25℃)

Parameter	Symbol	Condition	Rating	Unit
Power Dissipation	P_D	---	80	mW
Reverse Voltage	V_R	---	5	V
Forward Average Current	I_F	---	30	mA
Temperature cofficient	I/C	---	0.33	mA/ ℃
Pulse Current	IFP	Duty=1/10,1kHz	100	mA
Operating Temperature Range	Topr	---	-25 ~ +85	℃
Storage Temperature Range	Tstg	---	-30 ~ +100	℃
Soldering Condition	Tsd	---	260℃/5sec	℃

NOTE:

Luminous Intensity Measurement allowance is ± 10%.

$2\theta_{1/2}$ is the off-axis angle at which the luminous intensity is half the axial luminous intensity.

The dominant wavelength is derivd from the CIE chromaticity diagram and represents the single wavelength which defines the color of the device.

Typical Electro-Optical Characteristic Curves (Ta=25℃)

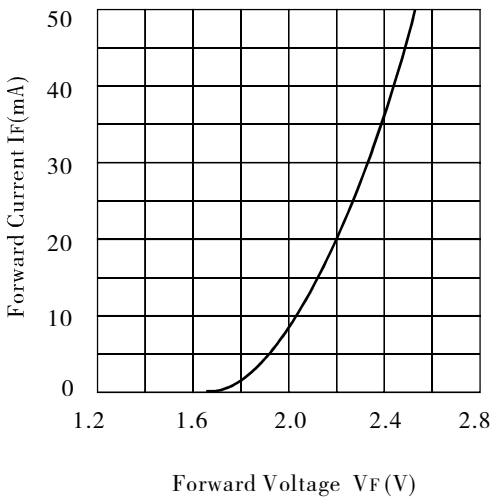

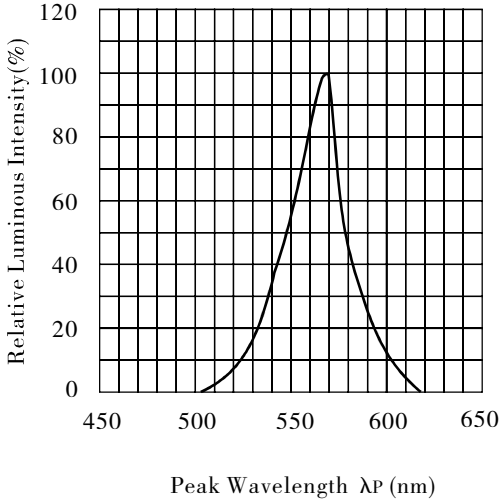

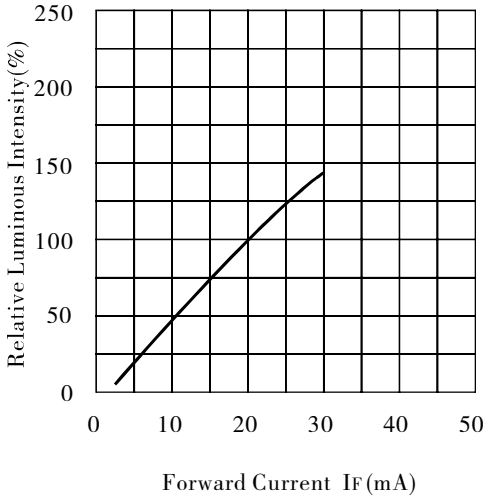

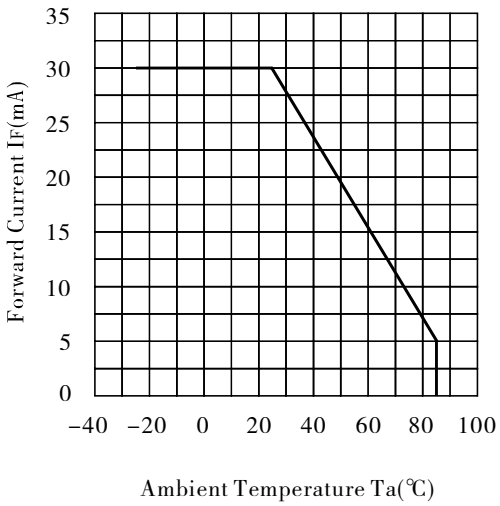

Directive Characteristics

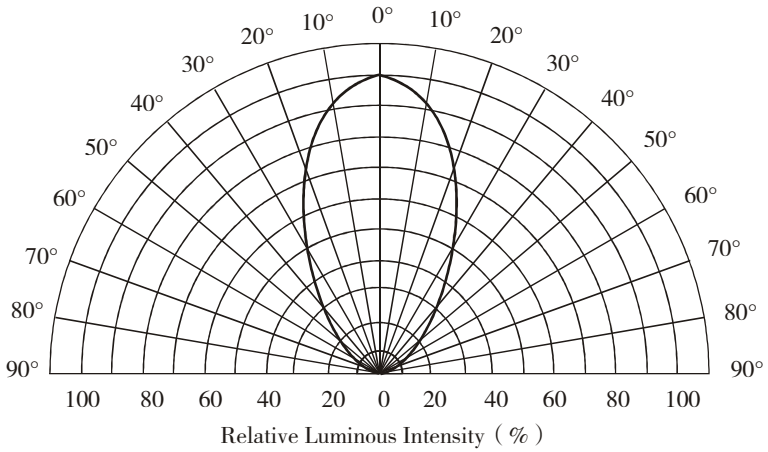

BIN Sub-Scale

Unit: @20mA		Luminous Intensity		Dominant Wavelength	
BIN Code	Color	Min	Max	Min	Max
G	Red	26.6	37.2	640	650
H		37.2	52.0	640	650
J		52.0	72.8	640	650
G	Green	26.6	37.2	570	572.5
H		37.2	52.0	570	572.5
J		52.0	72.8	570	572.5

Note:Tolerance of each bin limit is ± 15%

Reliability Test Conditions

Test Item	Test Condition	Result	Judgment Criteria
Consecutive operating life test	IF=20mA, T=25℃, t=168h	0/100	Forward Voltage VF(V)= Upper Limit × 1.2 Reverse Leakage Current IR(μA)=Upper Limit ×2.0 Luminous Intensity IV (mcd)=Lower Limit × 0.7
High temperature storage life test	T=100℃, t=168h	0/100	
Low temperature storage life test	T=25℃, t=168h	0/100	
High temperature humidity storage life test	T=85 ± 2℃, RH=85% ± 3, t=168h	0/100	
Temperature cycle test	-25℃~25℃~100℃ 30min 5min 30min 10cycles	0/100	
Thermal shock test	100℃ 0℃ 5min 5min 20cycles	0/100	
Soldering heat test	T=260 ± 5℃, t=10s ± 1s	0/100	
Solderability test	T=235 ± 5℃, t=5s ± 0.5s	0/100	Steeped Part≥95%
Fall test	h=100cm, 50times	0/100	Intact
Terminal strength test	W=9.8N, t=30 ± 5s	0/100	
Lead bending test	W=4.9N, 2times	0/100	